PROPRIETARY AND CONFIDENTIAL
THE INFORMATION CONTAINED IN THIS DRAWING IS THE SOLE PROPERTY OF UNICE E-O SERVICES INC. ANY REPRODUCTION IN PART OR AS A WHOLE WITHOUT THE WRITTEN PERMISSION OF UNICE E-O SERVICES INC IS PROHIBITED.

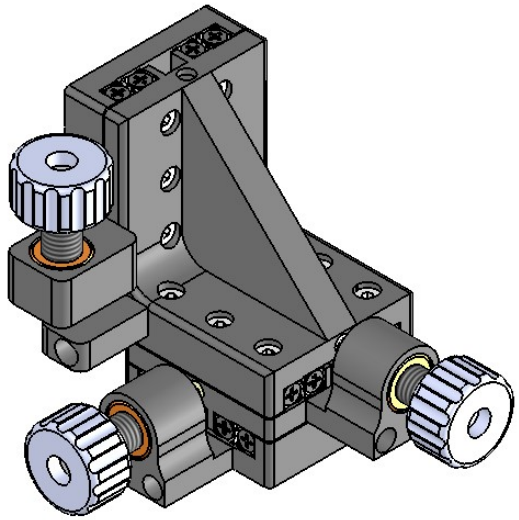

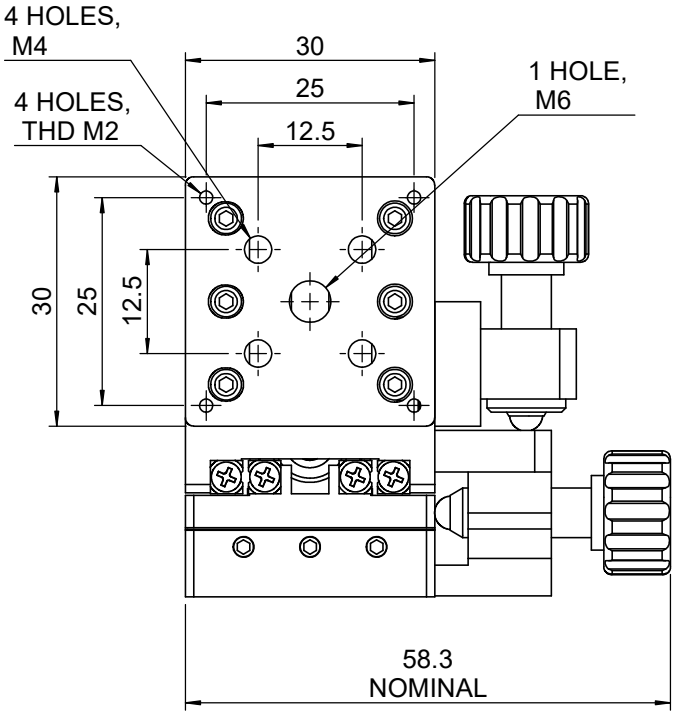

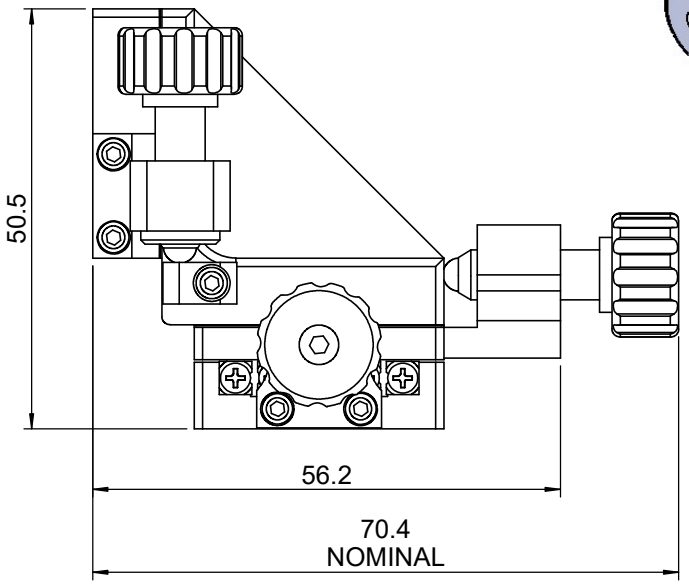

UNIT:m/m

Unice E-O Services Inc. No.5, Andong Rd., Chung Li District, Taoyuan City 32063, Taiwan, R.O.C.	TITLE:	56CTS-4RM
	DWG. NO.	56CTS-4RM
	MATERIAL:	N/A
	SCALE:	1.1:1
	REV	**0**

	NAME	DATE
DRAWN	Yuhan	2015/01/22
ENG APPR.	Johnny	2015/01/22