PROPRIETARY AND CONFIDENTIAL
THE INFORMATION CONTAINED IN THIS DRAWING IS THE SOLE PROPERTY OF UNICE E-O SERVICES INC. ANY REPRODUCTION IN PART OR AS A WHOLE WITHOUT THE WRITTEN PERMISSION OF UNICE E-O SERVICES INC IS PROHIBITED.

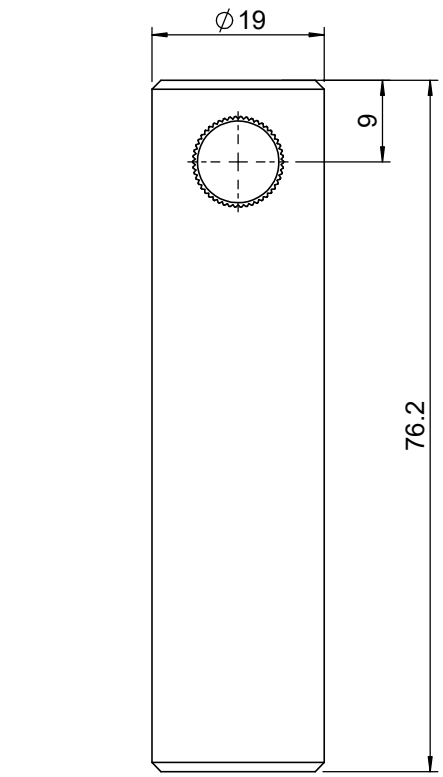

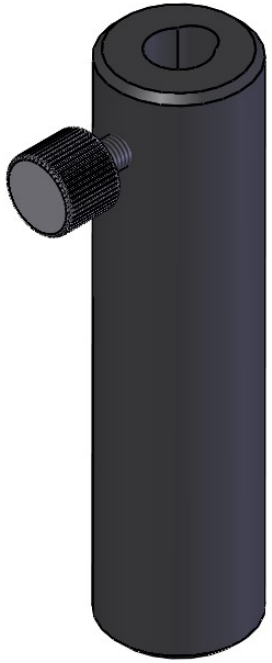

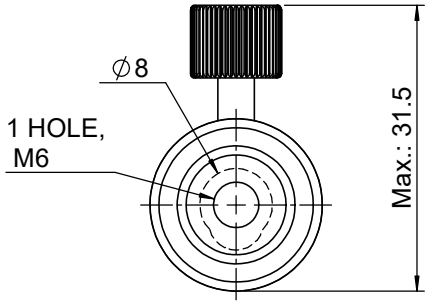

UNIT:m/m

Unice E-O Services Inc. No.5, Andong Rd., Chung Li District, Taoyuan City 32063, Taiwan, R.O.C.	TITLE:	53MPH-3M
	DWG. NO.	53MPH-3M
	MATERIAL:	N/A
	SCALE:	1.2:1
	REV	**0**

	NAME	DATE
DRAWN	Yuhan	2016/12/8
ENG APPR.	Johnny	2016/12/8