PROPRIETARY AND CONFIDENTIAL
THE INFORMATION CONTAINED IN THIS DRAWING IS THE SOLE PROPERTY OF UNICE E-O SERVICES INC. ANY REPRODUCTION IN PART OR AS A WHOLE WITHOUT THE WRITTEN PERMISSION OF UNICE E-O SERVICES INC IS PROHIBITED.

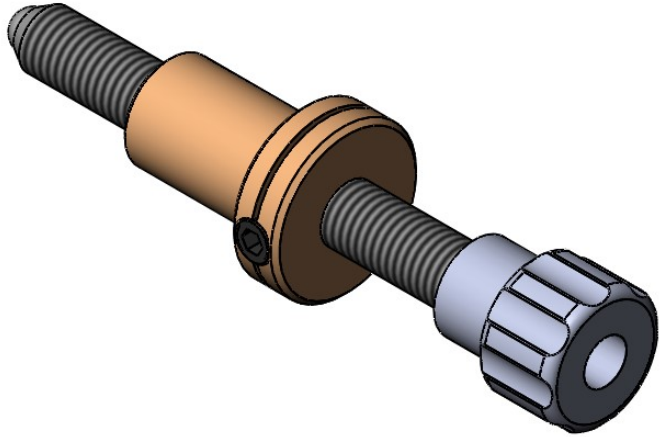

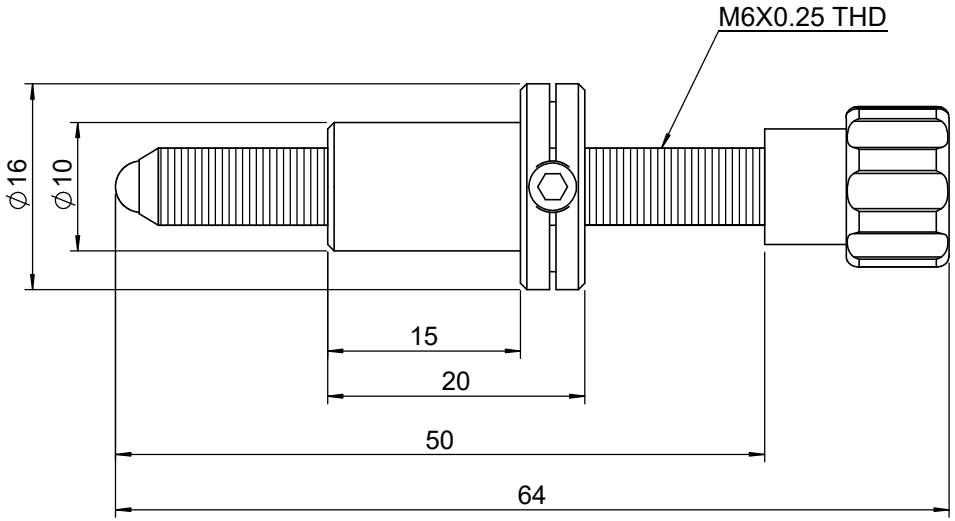

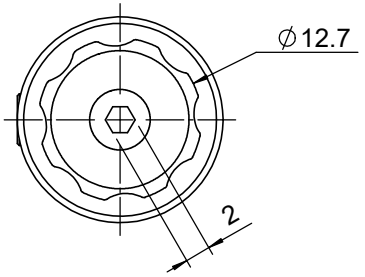

UNIT:m/m

Unice E-O Services Inc. No.5, Andong Rd., Chung Li District, Taoyuan City 32063, Taiwan, R.O.C.			TITLE: 07ASL-1
			DWG. NO. 07ASL-1
	NAME	DATE	MATERIAL: N/A
DRAWN	Eric	2010/12/30	
ENG APPR.	Johnny	2010/12/30	SCALE: 1.7:1
			REV **0**