PROPRIETARY AND CONFIDENTIAL
THE INFORMATION CONTAINED IN THIS DRAWING IS THE SOLE PROPERTY OF UNICE E-O SERVICES INC. ANY REPRODUCTION IN PART OR AS A WHOLE WITHOUT THE WRITTEN PERMISSION OF UNICE E-O SERVICES INC IS PROHIBITED.

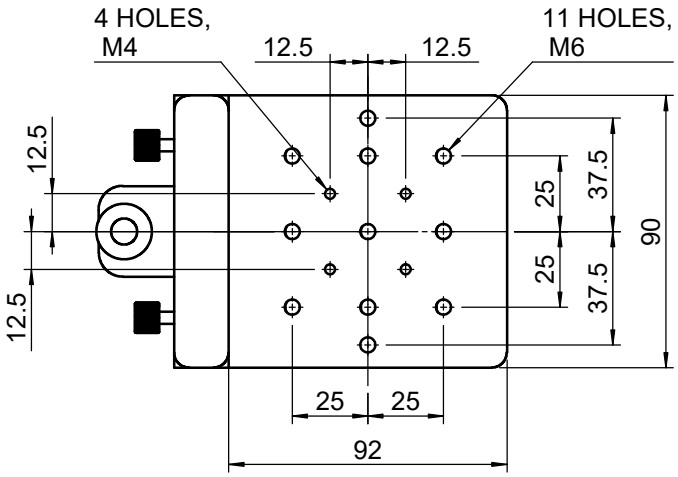

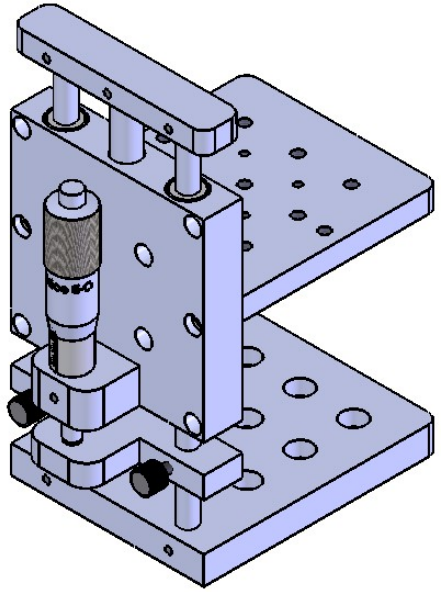

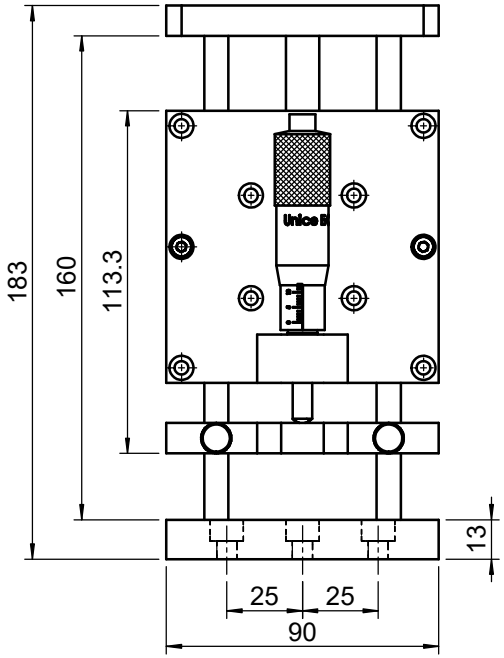

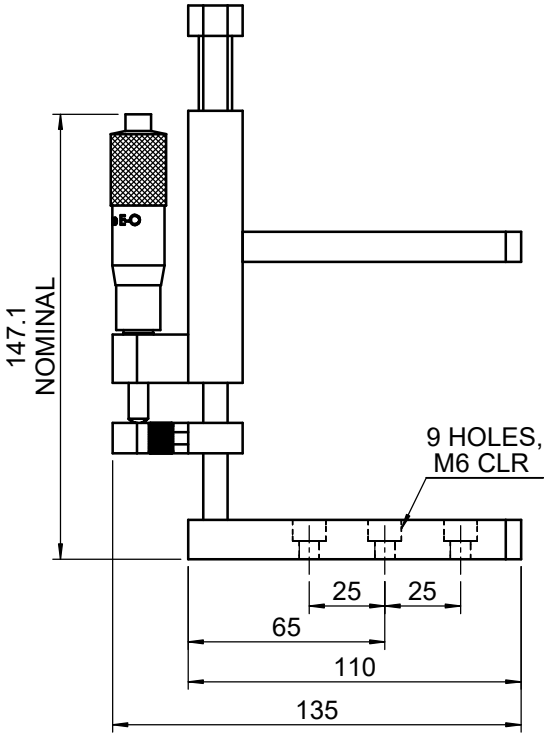

UNIT:m/m

Unice E-O Services Inc. No.5, Andong Rd., Chung Li District, Taoyuan City 32063, Taiwan, R.O.C.			TITLE: 06VTS-2M
			DWG. NO. 06VTS-2M
	NAME	DATE	MATERIAL: N/A
DRAWN	Sammy	2014/02/24	
ENG APPR.	Johnny	2014/02/24	SCALE: 1:2.5
			REV 0