PROPRIETARY AND CONFIDENTIAL
THE INFORMATION CONTAINED IN THIS DRAWING IS THE SOLE PROPERTY OF UNICE E-O SERVICES INC. ANY REPRODUCTION IN PART OR AS A WHOLE WITHOUT THE WRITTEN PERMISSION OF UNICE E-O SERVICES INC IS PROHIBITED.

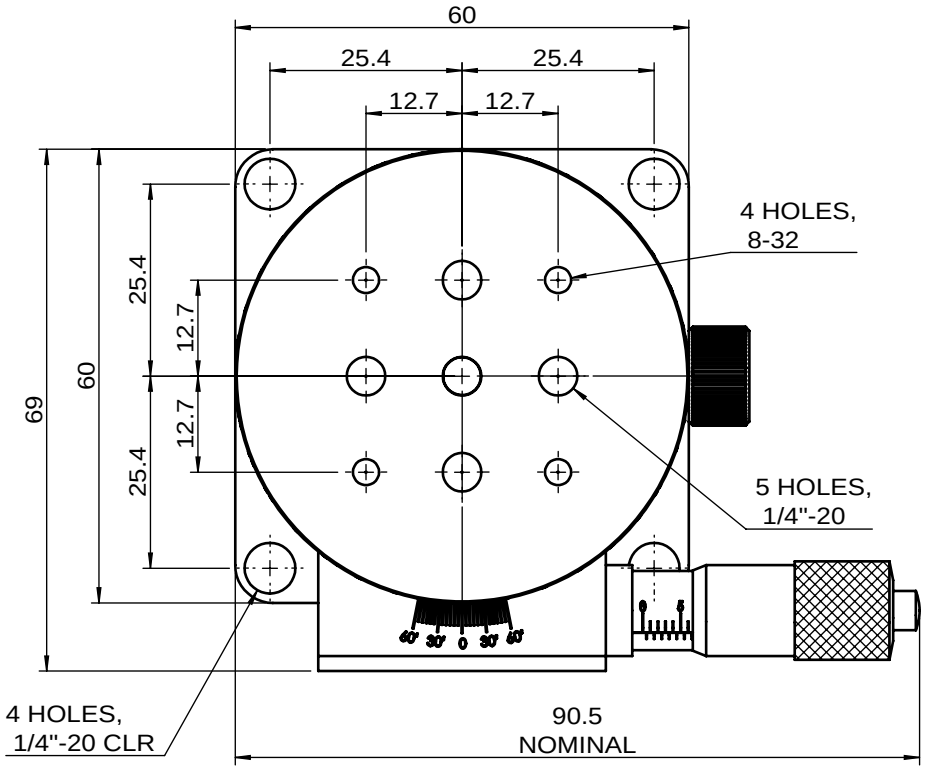

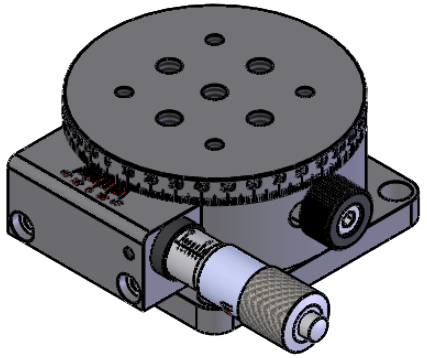

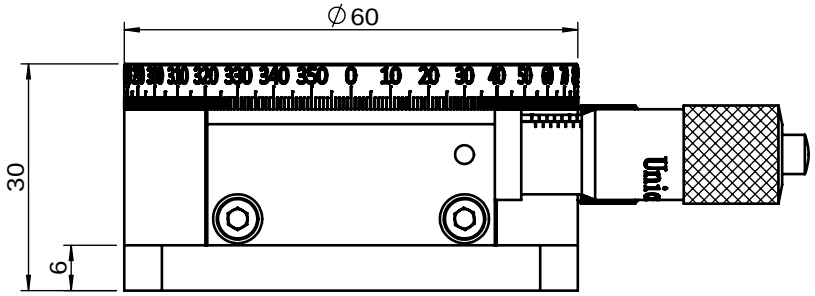

UNIT:m/m

ŘűŮŦŮğňİŒğŖŮŵŹŮŦŮŶğŌűŦı őŲıкįġńűŧŲűŪğŕŧıįġņūŸűŪğŏŮğŇŮŶŵŮŦŷį ŗŤŲżŸŤűġņŮŷżġĶĵijĹĶįġŗŤŮźŤűįġŕıŒıņı			TITLE:	06RSP-6
			DWG. NO.	06RSP-6
	NAME	DATE	MATERIAL:	N/A
DRAWN	Miki	2015/6/23		
ENG APPR.	Johnny	2015/6/23	SCALE:	1:1
			REV	0