PROPRIETARY AND CONFIDENTIAL
THE INFORMATION CONTAINED IN THIS DRAWING IS THE SOLE PROPERTY OF UNICE E-O SERVICES INC. ANY REPRODUCTION IN PART OR AS A WHOLE WITHOUT THE WRITTEN PERMISSION OF UNICE E-O SERVICES INC IS PROHIBITED.

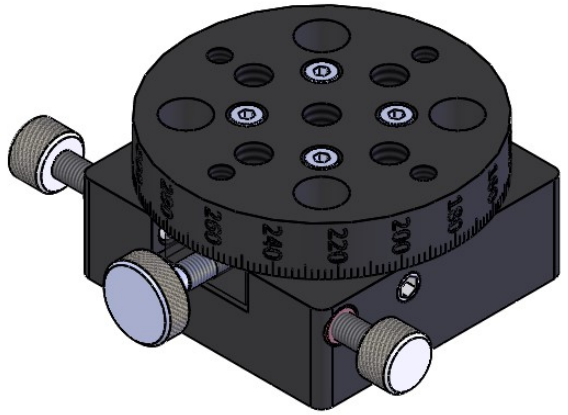

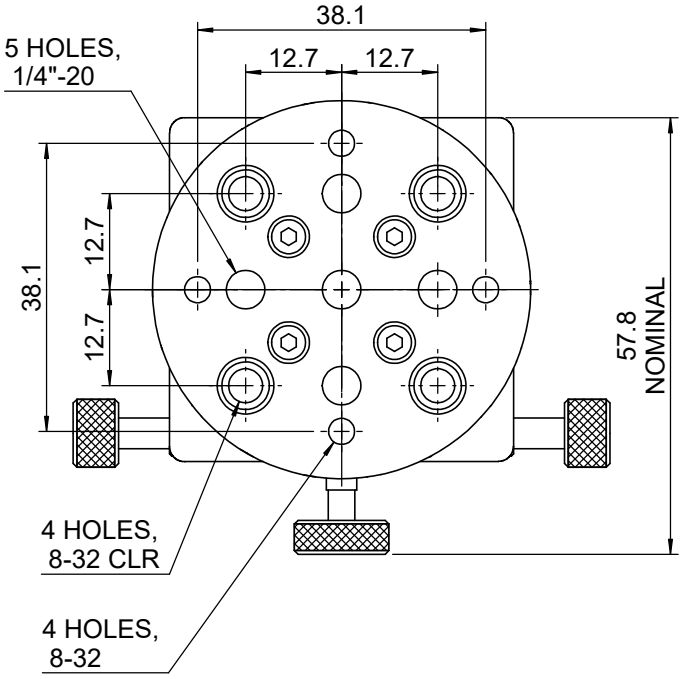

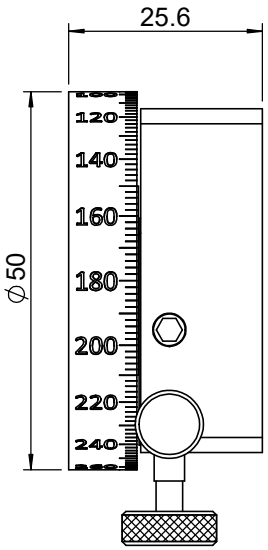

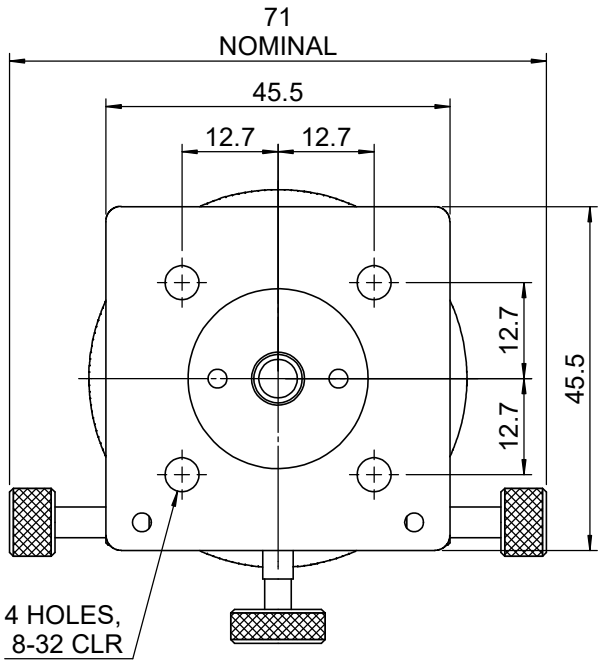

UNIT:m/m

Unice E-O Services Inc.			TITLE: 06RSP-5	
No.5 Andong Rd., Chungli City Taoyan County 32063, Taiwan			DWG. NO.	06RSP-5
	NAME	DATE	MATERIAL: N/A	
DRAWN	Yuhan	2014/8/28		
ENG APPR.	Johnny	2014/8/28	SCALE:	1:1
			REV	**0**