PROPRIETARY AND CONFIDENTIAL
THE INFORMATION CONTAINED IN THIS DRAWING IS THE SOLE PROPERTY OF UNICE E-O SERVICES INC. ANY REPRODUCTION IN PART OR AS A WHOLE WITHOUT THE WRITTEN PERMISSION OF UNICE E-O SERVICES INC IS PROHIBITED.

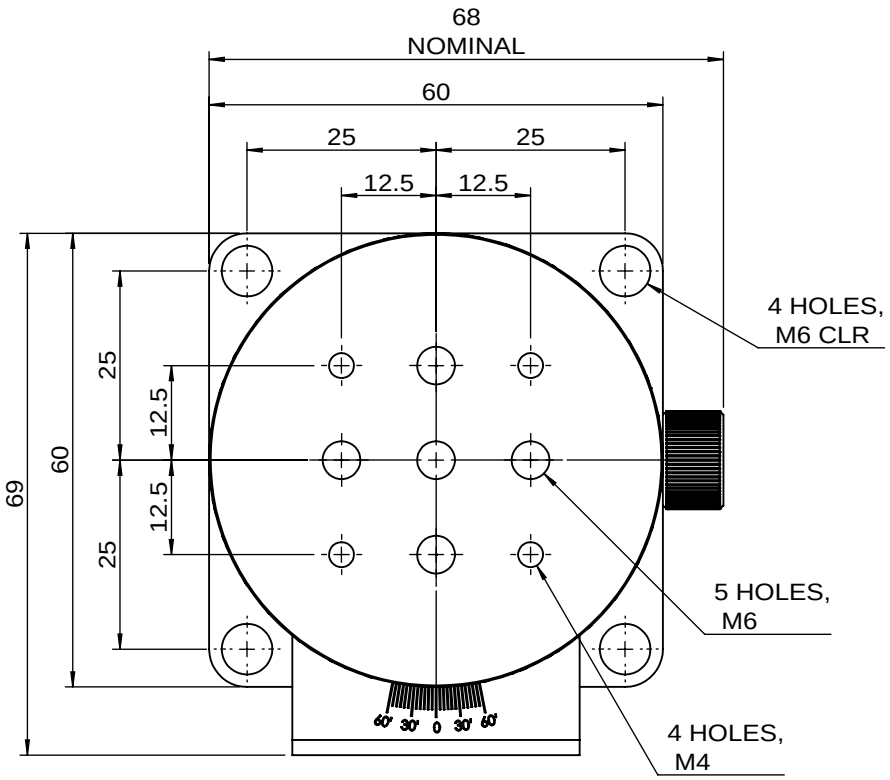

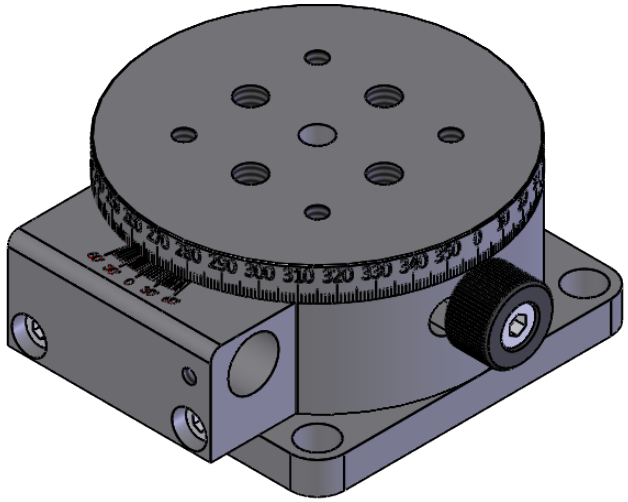

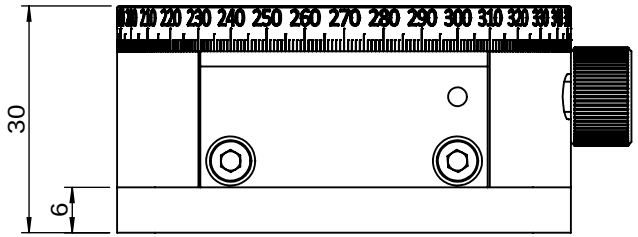

UNIT:m/m

ŘűŮŦŮğňİŒğŖŮŵŹŮŦŮŶğÔűŦı őŲıкiğńűŧŲűŮğŕŧıjğŋūŸűŮğŏŮğŇŮŶŷŵŮŦŷį ŗŤŲżŸŤűğŋŮŷżğĶĵijĹĶiğŗŤŮźŤűįğŕıŒıŋı			TITLE:	06RSP-4M
			DWG. NO.	06RSP-4M
	NAME	DATE	MATERIAL:	N/A
DRAWN	Yuhan	2014/8/22		
ENG APPR.	Johnny	2014/8/22	SCALE:	1:1
			REV	**0**