PROPRIETARY AND CONFIDENTIAL
THE INFORMATION CONTAINED IN THIS DRAWING IS THE SOLE PROPERTY OF UNICE E-O SERVICES INC. ANY REPRODUCTION IN PART OR AS A WHOLE WITHOUT THE WRITTEN PERMISSION OF UNICE E-O SERVICES INC IS PROHIBITED.

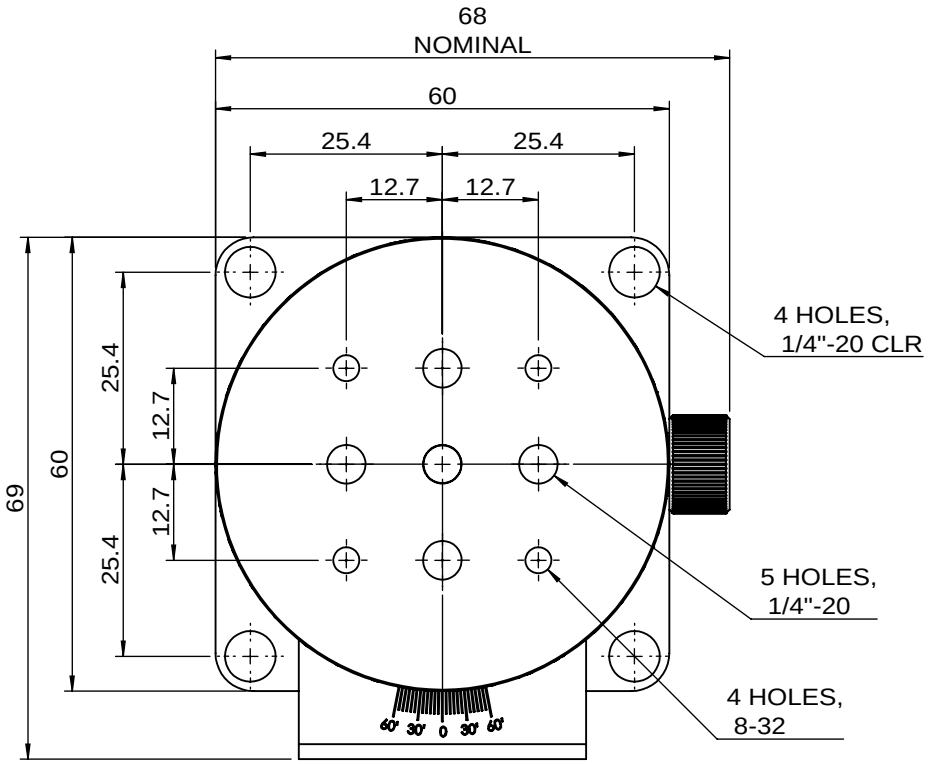

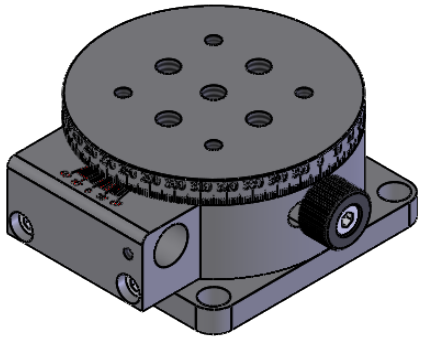

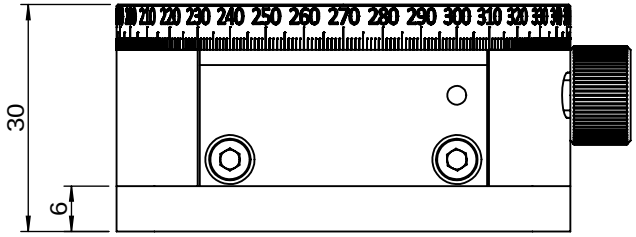

UNIT:m/m

	NAME	DATE
DRAWN	Yuhan	2014/8/22
ENG APPR.	Johnny	2014/8/22

TITLE:	06RSP-4
DWG. NO.	06RSP-4
MATERIAL:	N/A
SCALE:	1:1
REV	**0**