PROPRIETARY AND CONFIDENTIAL
THE INFORMATION CONTAINED IN THIS DRAWING IS THE SOLE PROPERTY OF UNICE E-O SERVICES INC. ANY REPRODUCTION IN PART OR AS A WHOLE WITHOUT THE WRITTEN PERMISSION OF UNICE E-O SERVICES INC IS PROHIBITED.

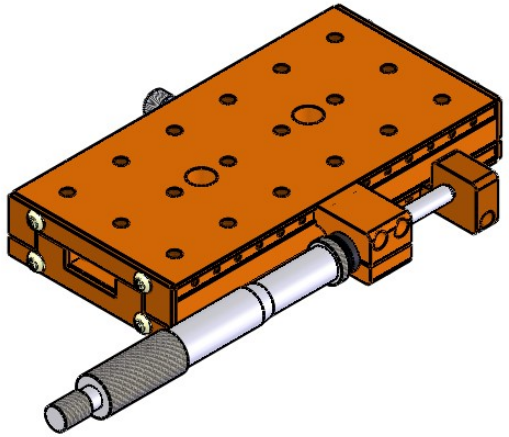

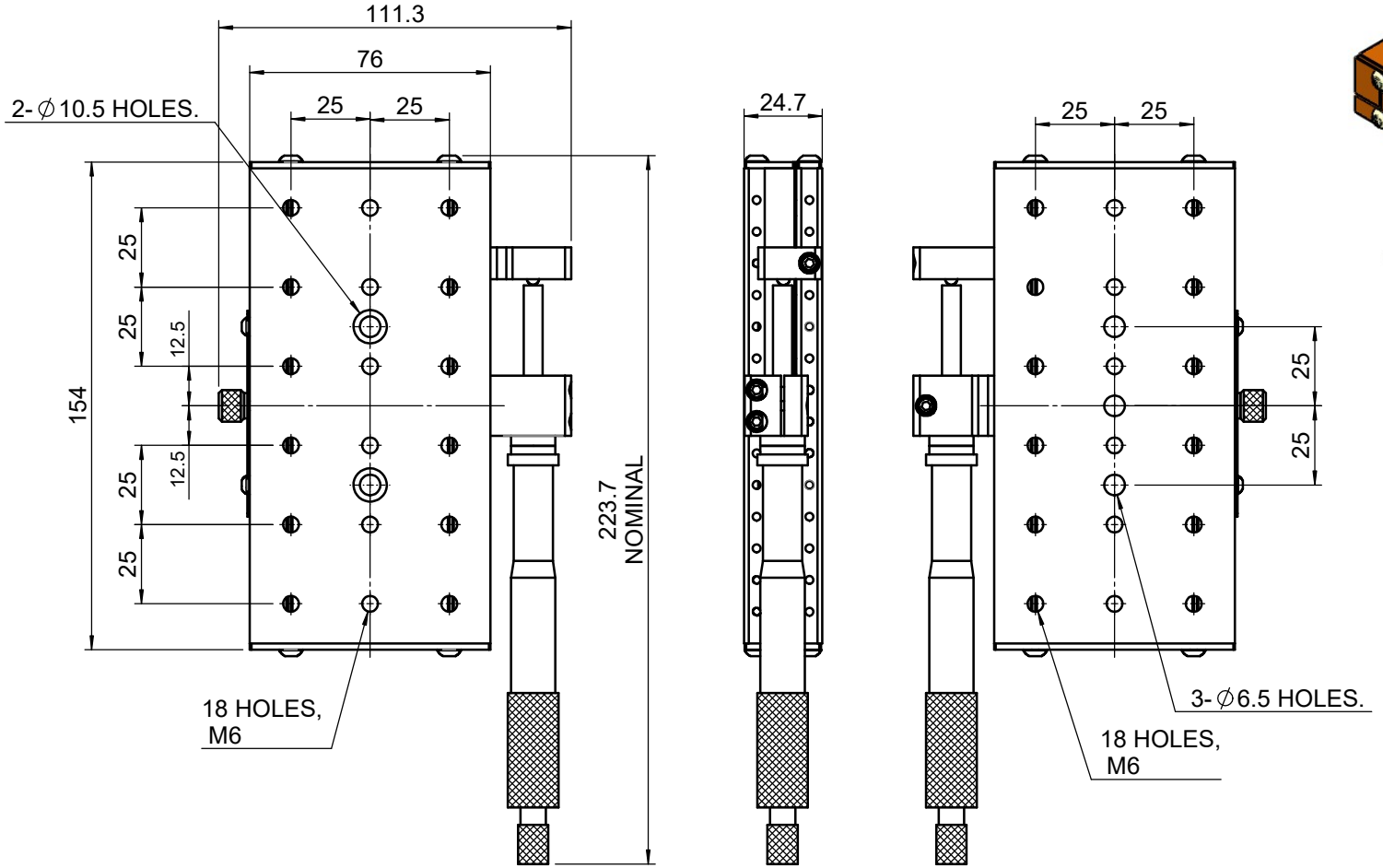

UNIT:m/m

Unice E-O Services Inc. No.5, Andong Rd., Chung Li District, Taoyuan City 32063, Taiwan, R.O.C.			TITLE: 06PTS-2M
			DWG. NO. 06PTS-2M
	NAME	DATE	MATERIAL: N/A
DRAWN	Miki	2015/6/24	
ENG APPR.	Johnny	2015/6/24	SCALE: 1:2.2
			REV 0