PROPRIETARY AND CONFIDENTIAL
THE INFORMATION CONTAINED IN THIS DRAWING IS THE SOLE PROPERTY OF UNICE E-O SERVICES INC. ANY REPRODUCTION IN PART OR AS A WHOLE WITHOUT THE WRITTEN PERMISSION OF UNICE E-O SERVICES INC IS PROHIBITED.

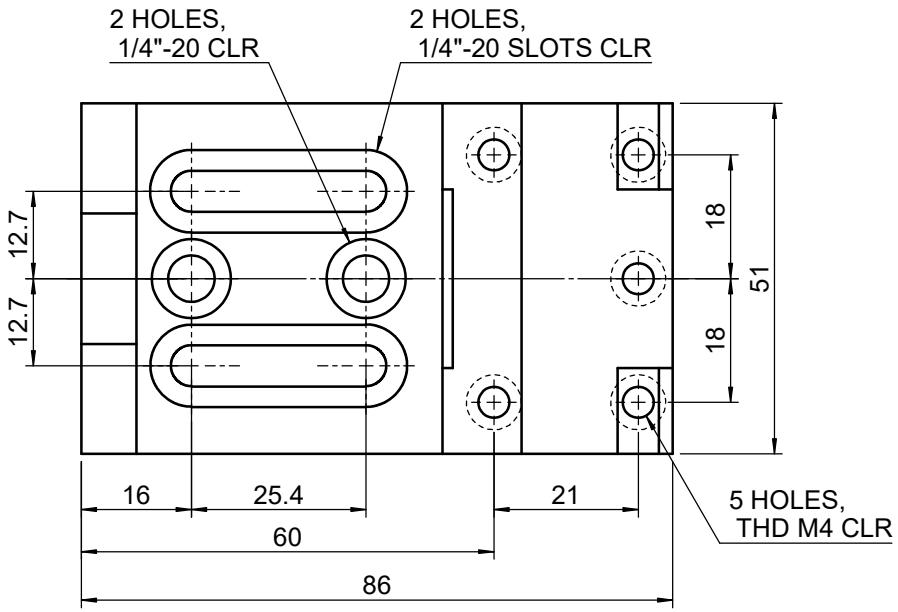

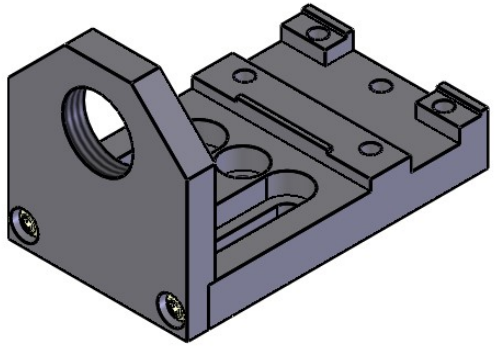

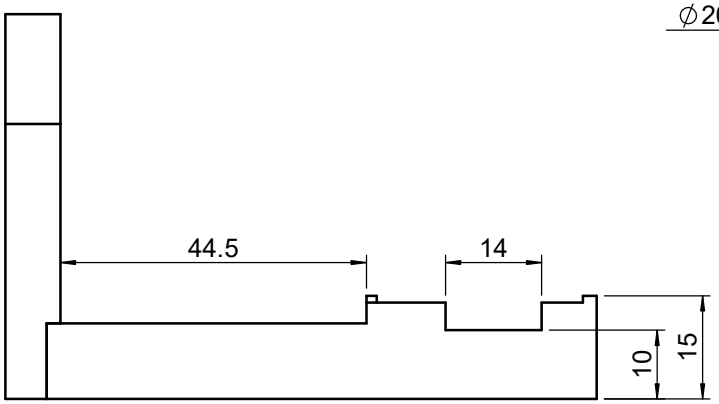

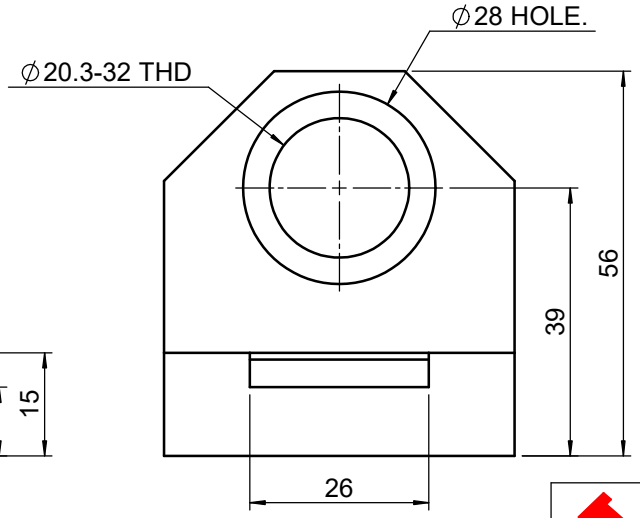

UNIT:m/m

	NAME	DATE
DRAWN	Miki	2015/6/8
ENG APPR.	Johnny	2015/6/8

Unice E-O Services Inc.
No.5, Andong Rd., Chung Li District,
Taoyuan City 32063, Taiwan, R.O.C.

TITLE:	06PFC-B
DWG. NO.	06PFC-B
MATERIAL:	N/A
SCALE:	1:1.2
REV	0