PROPRIETARY AND CONFIDENTIAL
THE INFORMATION CONTAINED IN THIS DRAWING IS THE SOLE PROPERTY OF UNICE E-O SERVICES INC. ANY REPRODUCTION IN PART OR AS A WHOLE WITHOUT THE WRITTEN PERMISSION OF UNICE E-O SERVICES INC IS PROHIBITED.

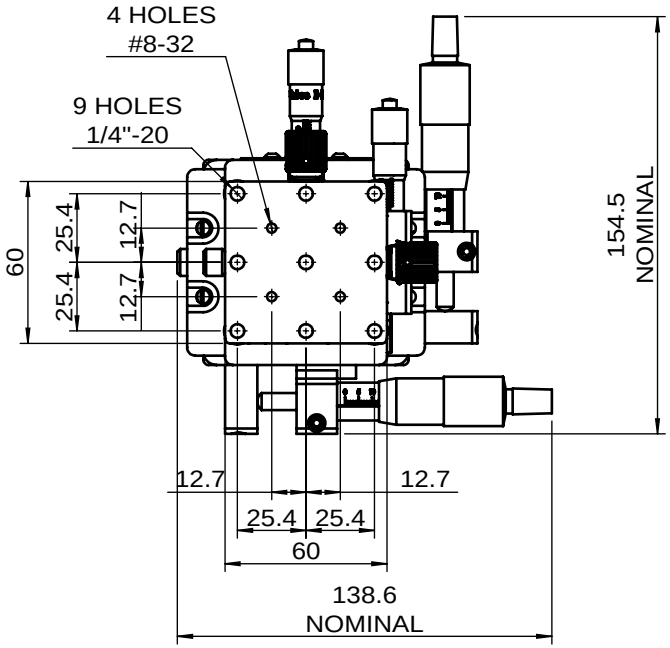

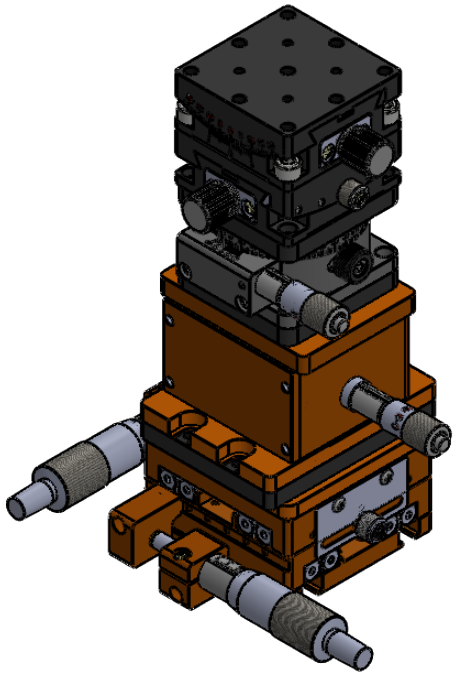

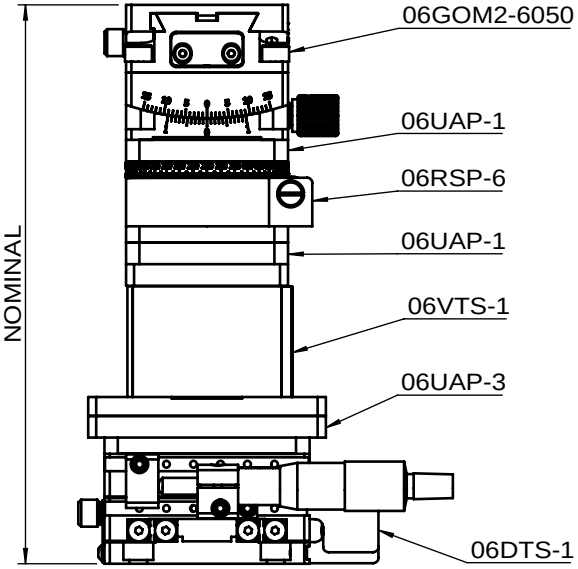

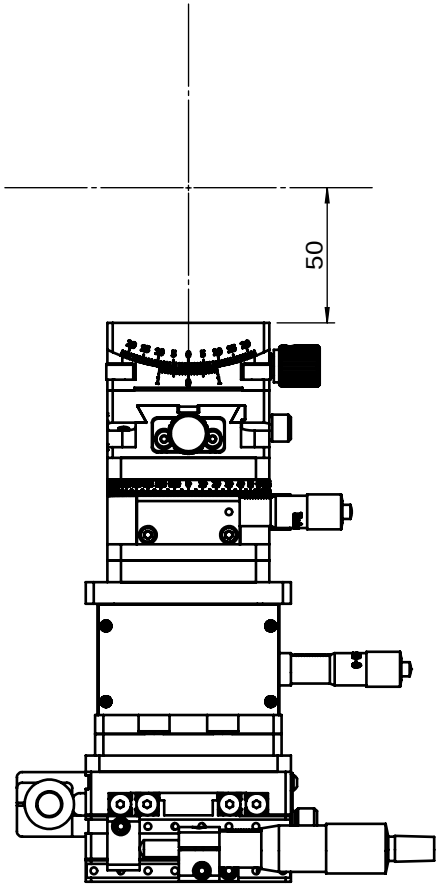

UNIT:m/m

ŘűŮŦŮğňİŒğŖŮŵŹŮŦŮŶğŐűŦı őŲıкįğńűŧŲűŮğŕŧıįğŋūŶűŮğŏŮğŇŮŶŷŵŮŦŷį ŗŤŲżŶŤűğŋŮŷżğĶĵijĹĶįğŗŤŮźŤűįğŕıŒıŋı			TITLE:	06MTG50-6
			DWG. NO.	06MTG50-6
	NAME	DATE	MATERIAL:	N/A
DRAWN	Terry	2017/10/2		
ENG APPR.	Johnny	2017/10/2	SCALE:	1:2.8
			REV	0