PROPRIETARY AND CONFIDENTIAL
THE INFORMATION CONTAINED IN THIS DRAWING IS THE SOLE PROPERTY OF UNICE E-O SERVICES INC. ANY REPRODUCTION IN PART OR AS A WHOLE WITHOUT THE WRITTEN PERMISSION OF UNICE E-O SERVICES INC IS PROHIBITED.

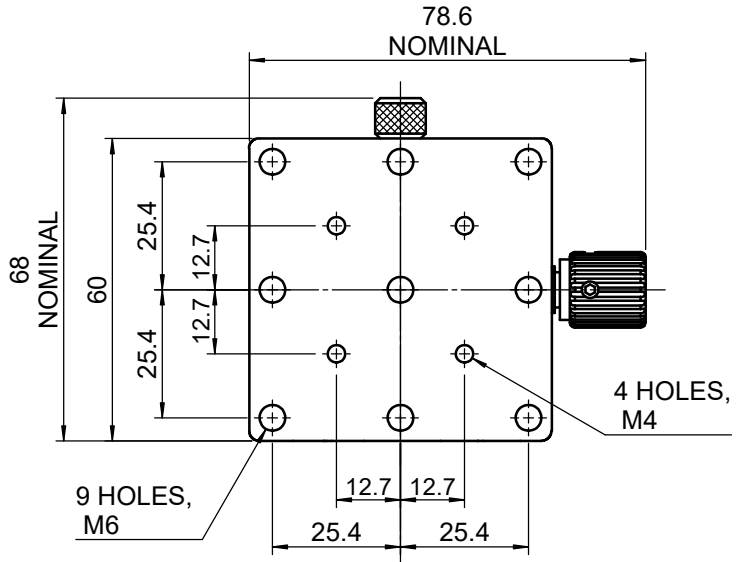

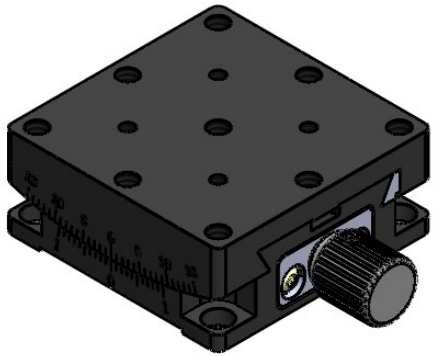

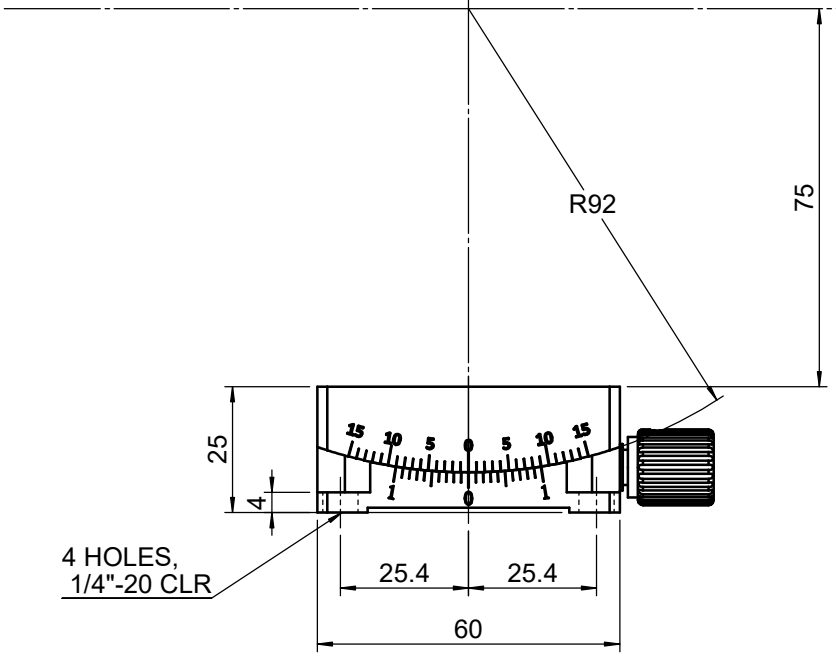

UNIT:m/m

Unice E-O Services Inc. No.5 Andong Rd., Chungli City Taoyan County 32063, Taiwan			TITLE: 06GOM-6075
			DWG. NO. 06GOM-6075
	NAME	DATE	MATERIAL: N/A
DRAWN	Jackie	2015/02/25	
ENG APPR.			SCALE: 1:1.5
			REV 0