PROPRIETARY AND CONFIDENTIAL
THE INFORMATION CONTAINED IN THIS DRAWING IS THE SOLE PROPERTY OF UNICE E-O SERVICES INC. ANY REPRODUCTION IN PART OR AS A WHOLE WITHOUT THE WRITTEN PERMISSION OF UNICE E-O SERVICES INC IS PROHIBITED.

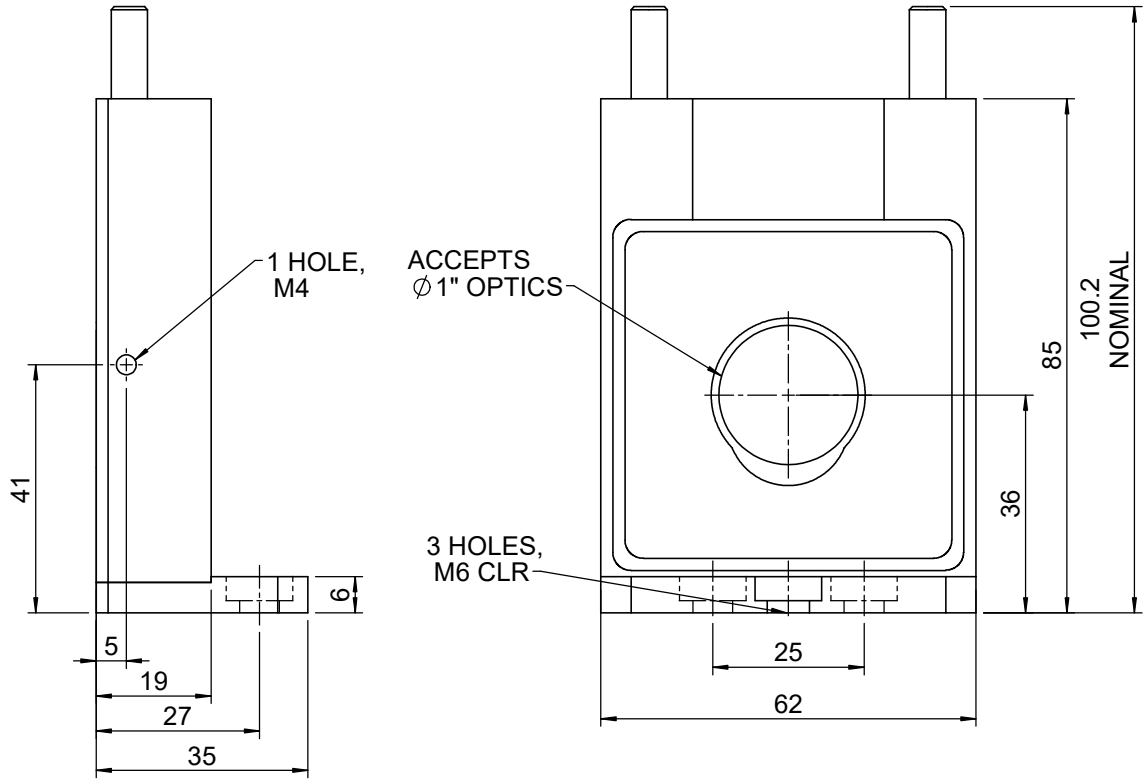


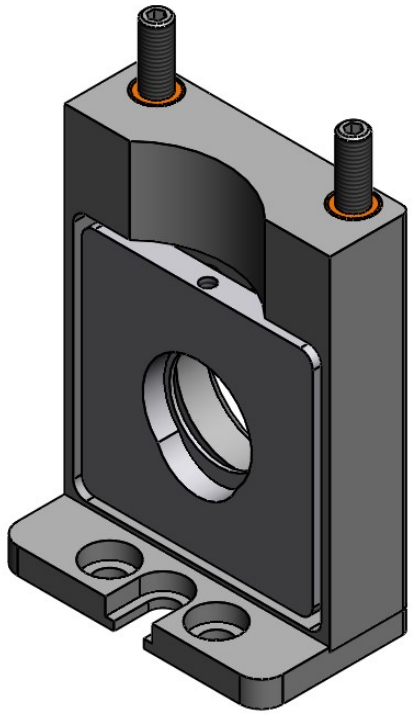

UNIT:m/m

| | | | |
|---|---|---|---|
| **Unice E-O Services Inc.**<br>No.5, Andong Rd., Chung Li District, Taoyuan City 32063, Taiwan, R.O.C. | | | TITLE: 04VMT-1M-H |
| | | | DWG. NO. 04VMT-1M-H |
| | NAME | DATE | MATERIAL: N/A |
| DRAWN | Yuhan | 2016/4/18 | |
| ENG APPR. | Johnny | 2016/4/18 | SCALE: 0.8:1 |
| | | | REV **0** |