PROPRIETARY AND CONFIDENTIAL
THE INFORMATION CONTAINED IN THIS DRAWING IS THE SOLE PROPERTY OF UNICE E-O SERVICES INC. ANY REPRODUCTION IN PART OR AS A WHOLE WITHOUT THE WRITTEN PERMISSION OF UNICE E-O SERVICES INC IS PROHIBITED.

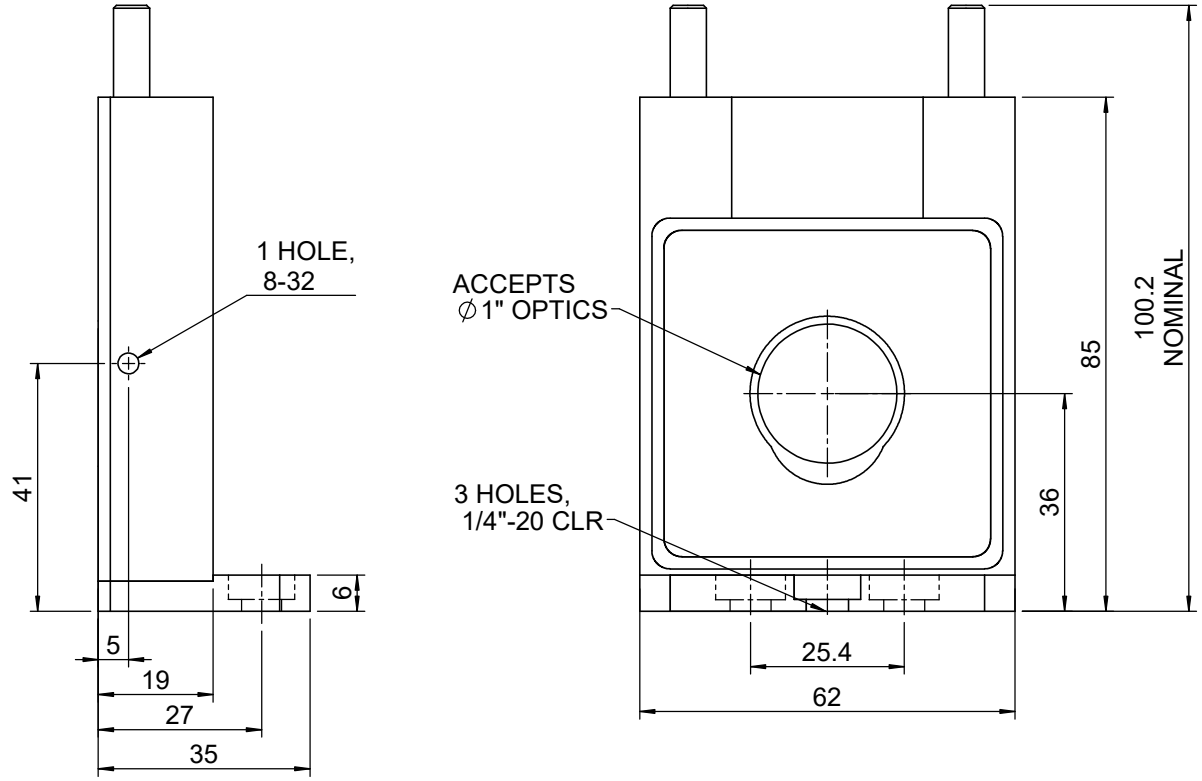

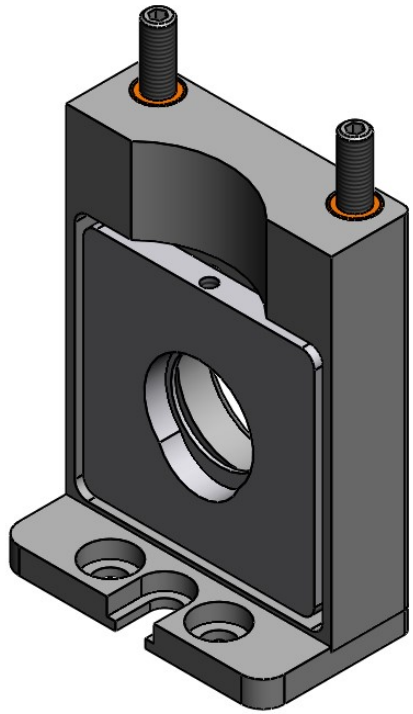

UNIT:m/m

Unice E-O Services Inc. No.5, Andong Rd., Chung Li District, Taoyuan City 32063, Taiwan, R.O.C.	TITLE:	04VMT-1-H
	DWG. NO.	04VMT-1-H
	MATERIAL:	N/A
	SCALE:	0.8:1
	REV	**0**

	NAME	DATE
DRAWN	Yuhan	2016/4/18
ENG APPR.	Johnny	2016/4/18