PROPRIETARY AND CONFIDENTIAL
THE INFORMATION CONTAINED IN THIS DRAWING IS THE SOLE PROPERTY OF UNICE E-O SERVICES INC. ANY REPRODUCTION IN PART OR AS A WHOLE WITHOUT THE WRITTEN PERMISSION OF UNICE E-O SERVICES INC IS PROHIBITED.

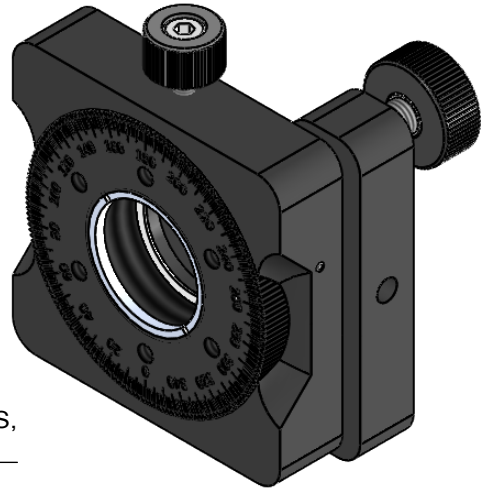

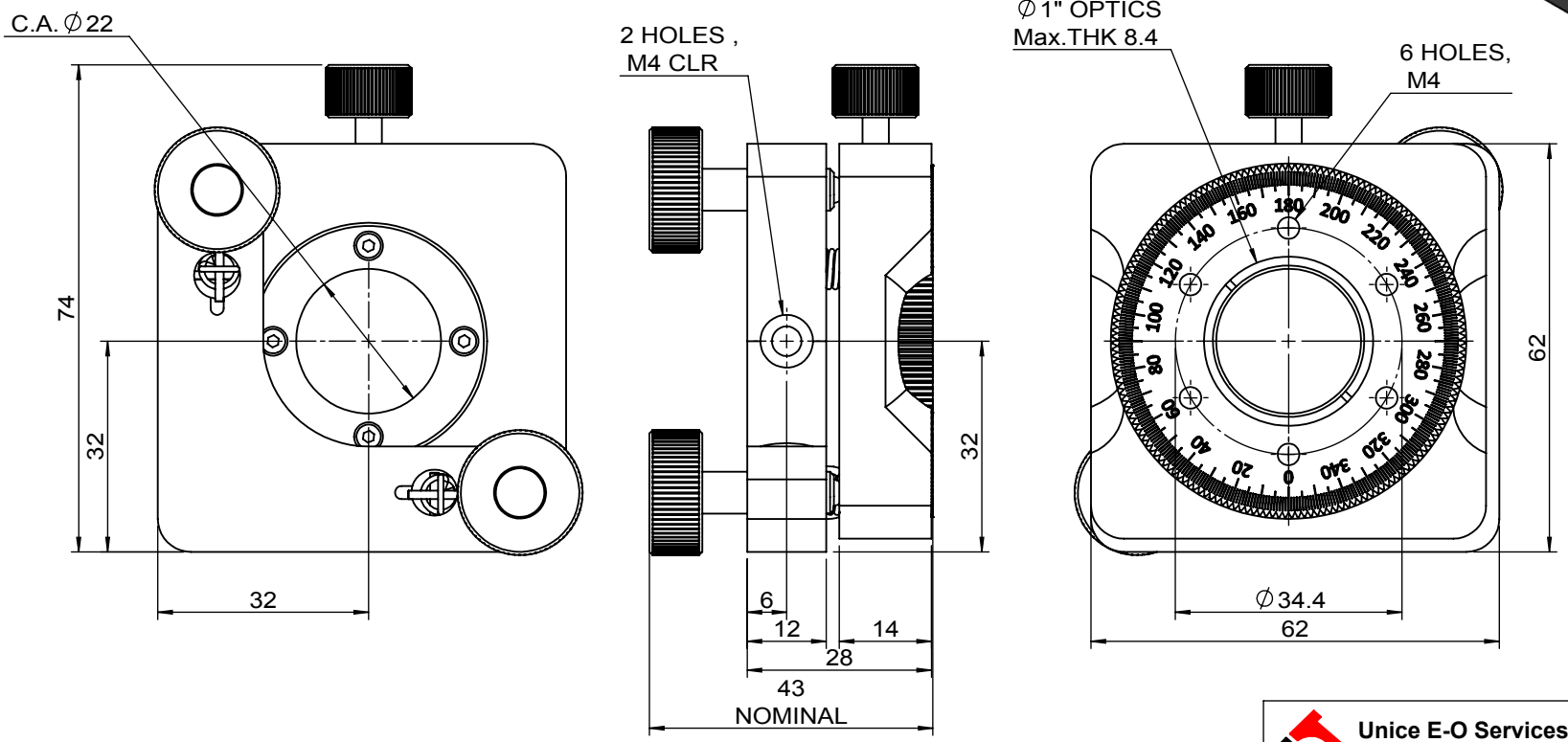


UNIT:m/m

| | | | |
|---|---|---|---|
| **Unice E-O Services Inc.**<br>No.5, Andong Rd., Chung Li District,<br>Taoyuan City 32063, Taiwan, R.O.C. | | | TITLE: 04TRM-1M |
| | | | DWG. NO. 04TRM-1M |
| | NAME | DATE | MATERIAL: N/A |
| DRAWN | Sky | 2018/4/13 | |
| ENG APPR. | Johnny | 2018/4/13 | SCALE: 1:1.1 |
| | | | REV **0** |