PROPRIETARY AND CONFIDENTIAL
THE INFORMATION CONTAINED IN THIS DRAWING IS THE SOLE PROPERTY OF UNICE E-O SERVICES INC. ANY REPRODUCTION IN PART OR AS A WHOLE WITHOUT THE WRITTEN PERMISSION OF UNICE E-O SERVICES INC IS PROHIBITED.

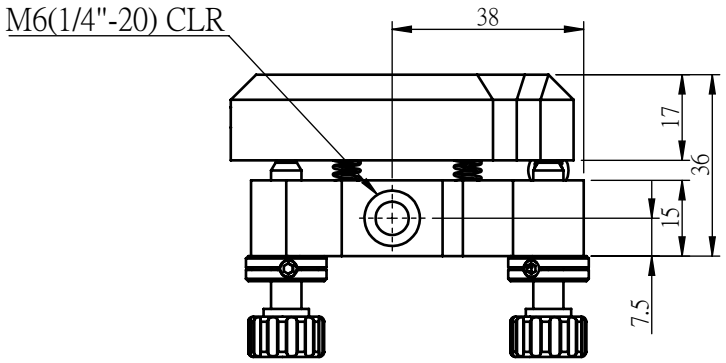

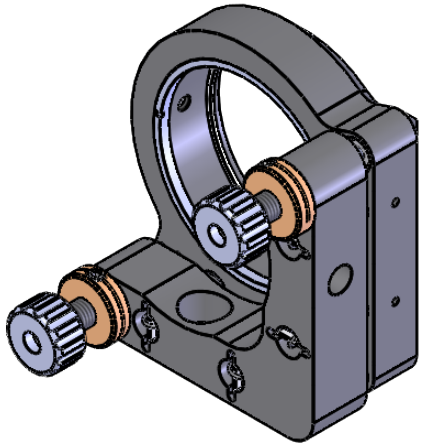

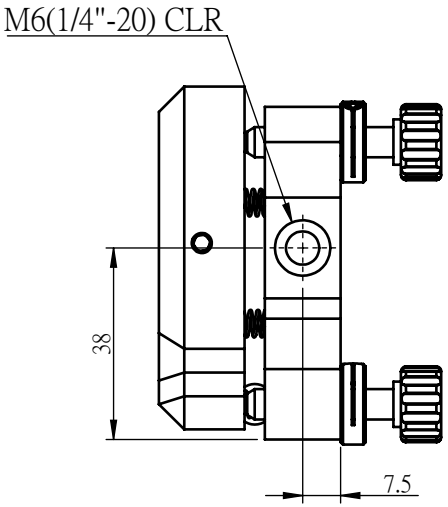

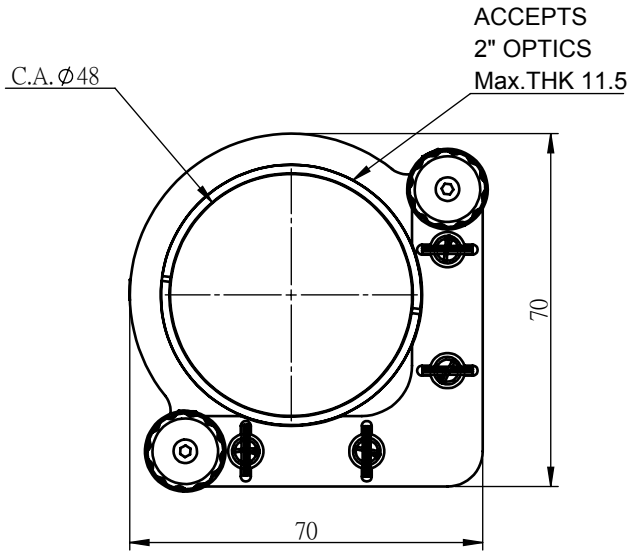

UNIT:m/m

Unice E-O Services Inc. No.5, Andong Rd., Chung Li District, Taoyuan City 32063, Taiwan, R.O.C.			TITLE: 04RMT-2(M)
			DWG. NO. 04RMT-2(M)
	NAME	DATE	MATERIAL: N/A
DRAWN	Sky	2018/4/13	
ENG APPR.	Johnny	2018/4/13	SCALE: 1:1.5
			REV 0