PROPRIETARY AND CONFIDENTIAL
THE INFORMATION CONTAINED IN THIS DRAWING IS THE SOLE PROPERTY OF UNICE E-O SERVICES INC. ANY REPRODUCTION IN PART OR AS A WHOLE WITHOUT THE WRITTEN PERMISSION OF UNICE E-O SERVICES INC IS PROHIBITED.

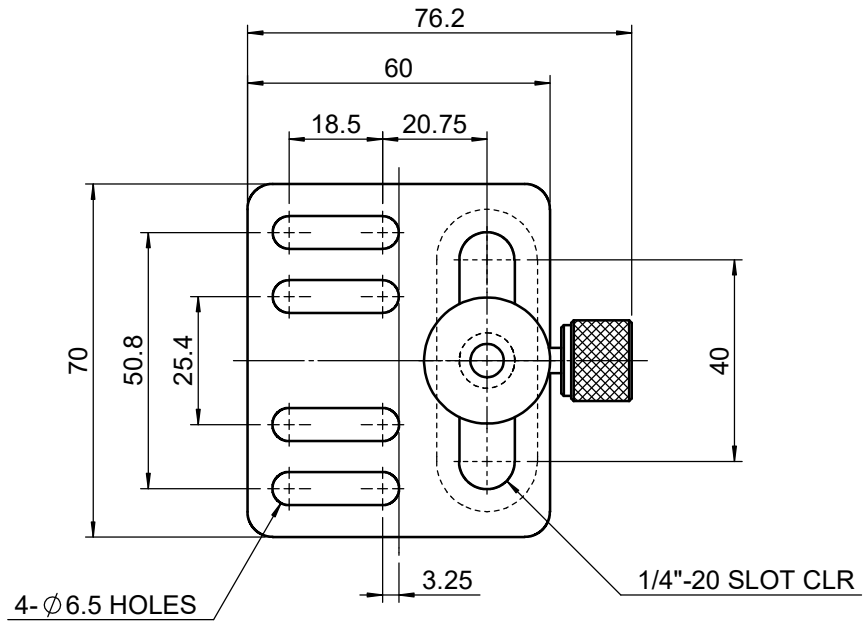

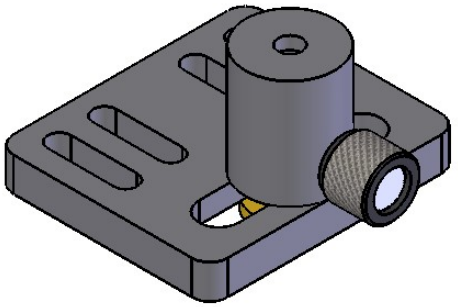

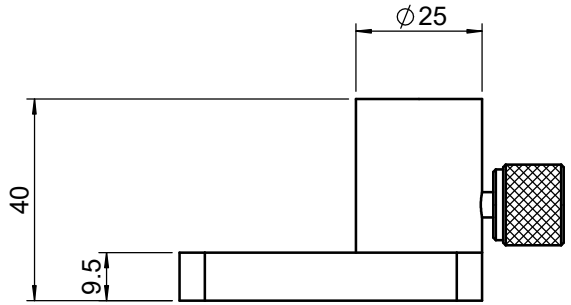

UNIT:m/m

Unice E-O Services Inc.			TITLE: 02SDB-8	
No.5, Andong Rd., Chung Li District, Taoyuan City 32063, Taiwan, R.O.C.			DWG. NO.	02SDB-8
	NAME	DATE	MATERIAL: N/A	
DRAWN	Miki	2010/12/30		
ENG APPR.	Johnny	2010/12/30	SCALE:	1:1.5
			REV	0