PROPRIETARY AND CONFIDENTIAL
THE INFORMATION CONTAINED IN THIS DRAWING IS THE SOLE PROPERTY OF UNICE E-O SERVICES INC. ANY REPRODUCTION IN PART OR AS A WHOLE WITHOUT THE WRITTEN PERMISSION OF UNICE E-O SERVICES INC IS PROHIBITED.

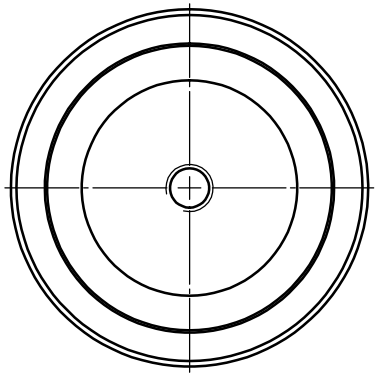

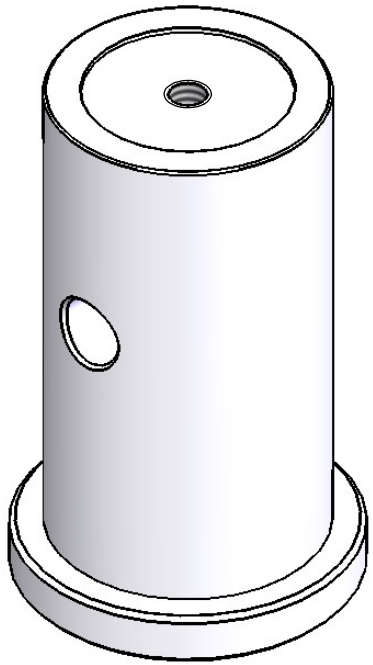

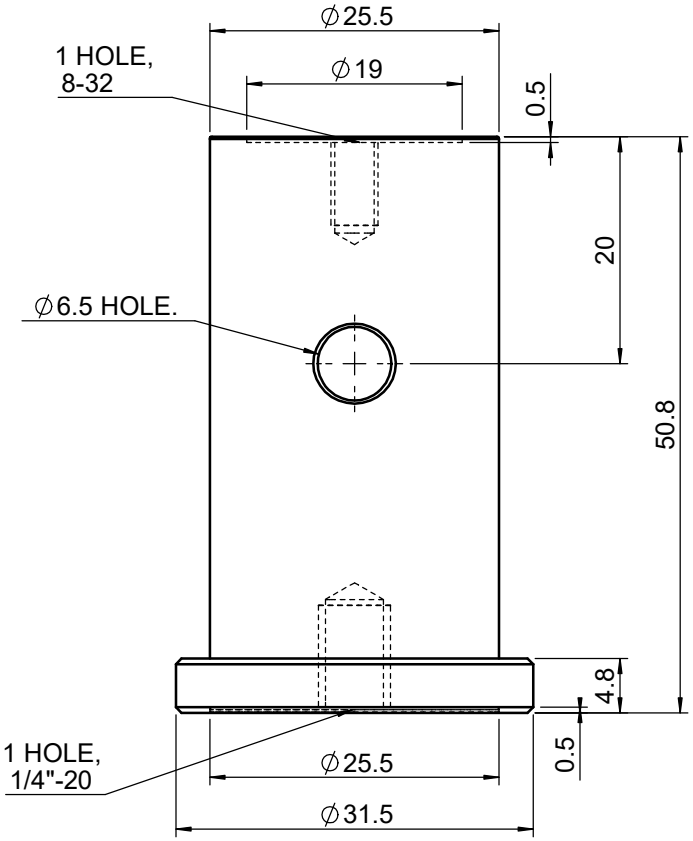


UNIT:m/m

| | | | |
|---|---|---|---|
| **Unice E-O Services Inc.**<br>No.5, Andong Rd., Chung Li District, Taoyuan City 32063, Taiwan, R.O.C. | | | TITLE: 02FHP-2 |
| | | | DWG. NO. 02FHP-2 |
| | NAME | DATE | MATERIAL: N/A |
| DRAWN | Miki | 2010/12/30 | |
| ENG APPR. | Johnny | 2010/12/30 | SCALE: 1.5:1 |
| | | | REV 0 |